PART NO. DCAE670

	DIM. W	DIM. X	DIM. Y
WITH 3.875(98.4) LONG CAPACITOR	1.453-1.703 / 36.9-43.3	4.078-4.141 / 103.6-105.2	———
WITH 1.438(36.5) DIA. CAPACITOR	———	———	1.969-2.031 / 50.0-51.6
WITH 4.875(123.8) LONG CAPACITOR	1.953-2.203 / 49.6-56.0	5.078-5.141 / 129.0-130.6	———
WITH 1.813(46.1) DIA. CAPACITOR	———	———	2.344-2.406 / 59.5-61.1

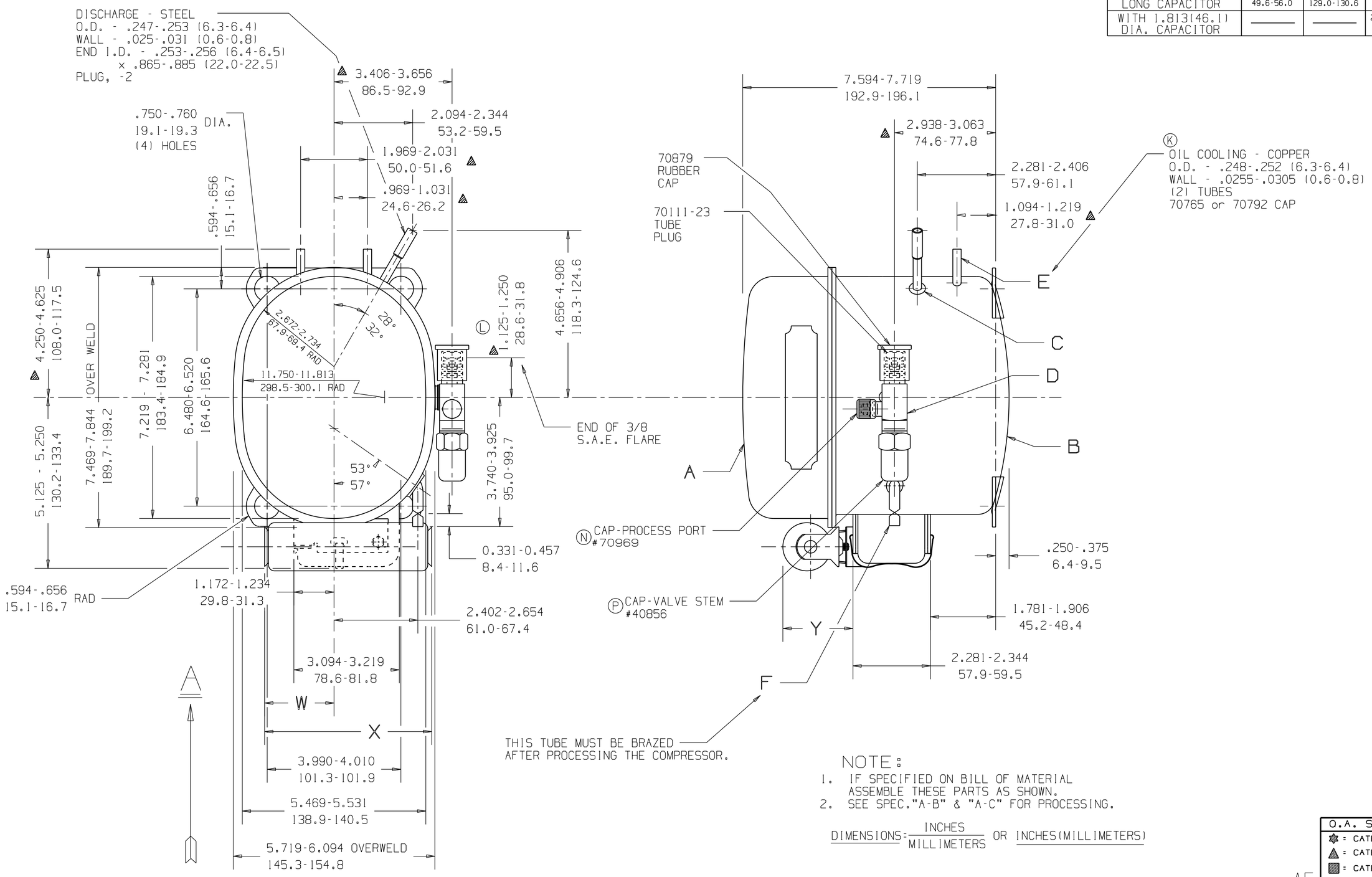

NOTE:

1. IF SPECIFIED ON BILL OF MATERIAL ASSEMBLE THESE PARTS AS SHOWN.
2. SEE SPEC."A-B" & "A-C" FOR PROCESSING.

DIMENSIONS: INCHES / MILLIMETERS OR INCHES(MILLIMETERS)

Q.A. SYMBOLS
✡ = CATEGORY I
▲ = CATEGORY II
▨ = CATEGORY III
= CATEGORY IV

AE

			APR.	CK.	CHANGE	DATE
A	32095		REEVES 21OCT98	R	#237508-000 ADDED TUBE #34690	
B	HA531-22		HMB 3/2/93	P	#40856 ADDED #226958	
C	34358-2		HMB 3/2/93	N	#70969 ADDED #226958	
(M) D	31580-1		HMB 3/2/93	M	WAS A11148 #226958	
(J) E	34325-5		HMB 8/21/92	L	1.469-1.594 (37.3-40.5) #226031	
(R) F	34690		HMB 1/16/92	K	NOTE REVISED #224120	
			HMB 1/16/92	J	WAS 34325-2 #224120	
			HMB 1/16/92	H	REDRAWN- NO CHANGE, ON TO CAD #224120	

LT LC

THIS DRAWING OR PRINT (I) IS THE COMPANY'S (TECUMSEH PRODUCTS COMPANY) EXCLUSIVE PROPERTY AND CONFIDENTIAL (II) IS MADE AVAILABLE TO TECUMSEH, SUBJECT TO THE EXPRESS AND SPECIFIC CONDITION THAT NEITHER IT NOR THE INFORMATION CONTAINED THEREIN SHALL BE DISCLOSED OR MADE AVAILABLE TO OTHERS WITHOUT THE EXPRESS AND SPECIFIC WRITTEN CONSENT OF TECUMSEH AND THAT SUCH INFORMATION SHALL NOT BE USED FOR ANY PURPOSE NOT APPROVED IN WRITING BY TECUMSEH. (III) SHALL NOT BE REPRODUCED IN ANY MANNER OR TO ANY EXTENT WITHOUT THE EXPRESS AND SPECIFIC WRITTEN CONSENT AND (IV) UPON TECUMSEH'S REQUEST THE RECIPIENT SHALL RETURN THE ORIGINAL AND ALL COPIES TO TECUMSEH PROMPTLY AFTER SUCH REQUEST IS MADE.

DIS.CODE

DRAWING SCALE THIS DRAWING FERRUS MATERIALS MUST NOT BE MAGNETIZED AS RESULTING PARTS OR COMPRESSOR ASSEMBLY.

NAME: SALES COMPRESSOR

DWN.	CK.	APR.	SCALE
BRODERICK 1/15/92	McCAUGHEY 3/3/93	BLNADEN	1":2"

THIS PRINT SUPERSEDES ALL PRINTS PRIOR TO

TECUMSEH PRODUCTS CO.
TECUMSEH, MICHIGAN

MATERIAL: NOTED

INTERNAL USE ONLY
P:\reeves\ae\ae-dcae670_r-c.prt

PART NO. DCAE670